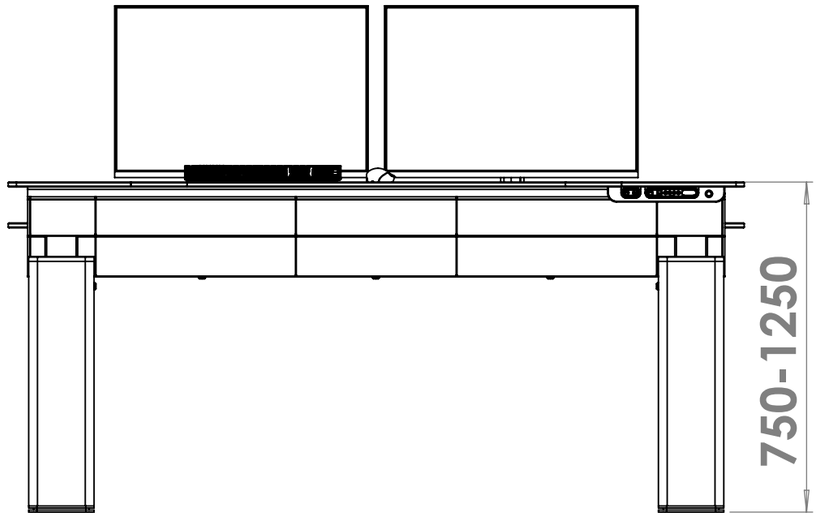

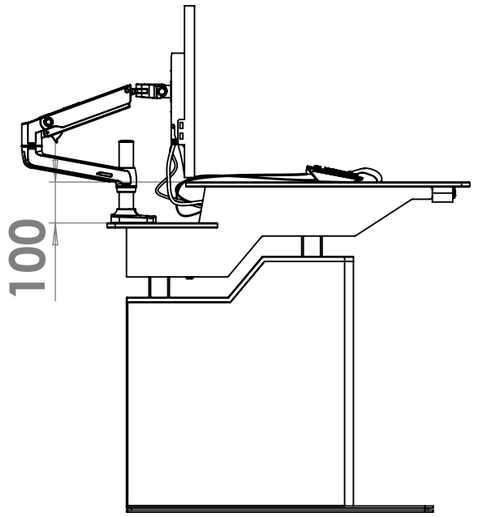

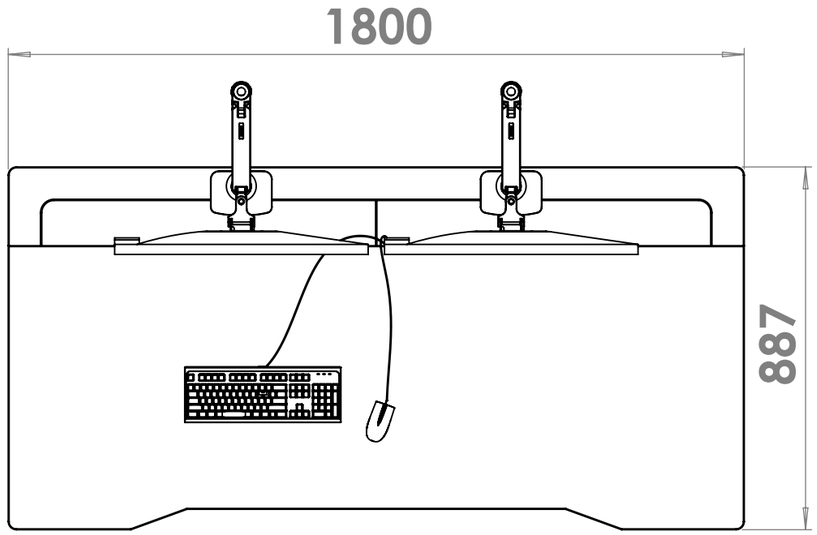

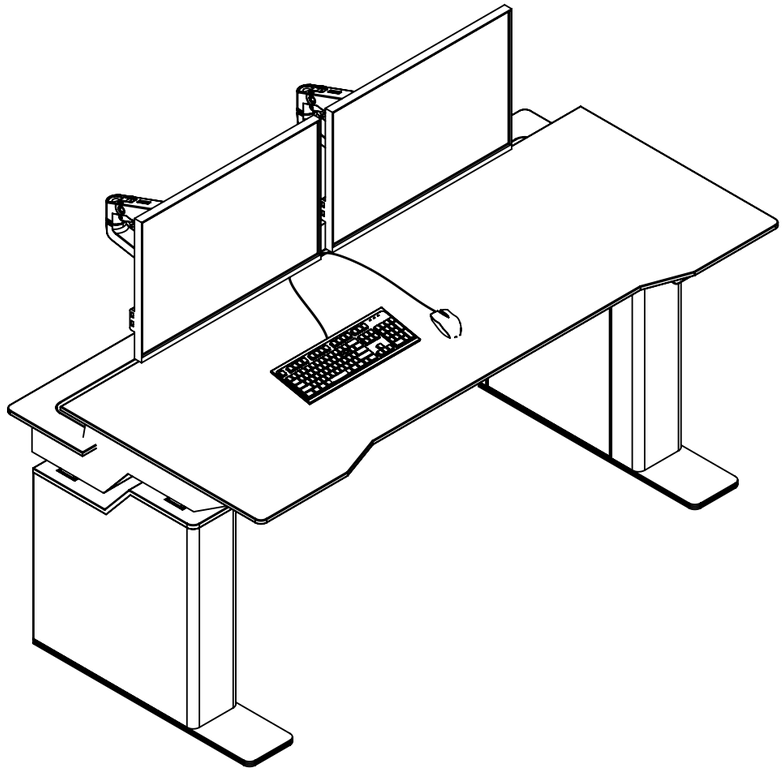

Ergo.Dual S180